Cambridge International AS & A Level

Cambridge Assessment International Education
Cambridge International Advanced Subsidiary and Advanced Level

CANDIDATE NAME

CENTRE NUMBER

CANDIDATE NUMBER

9921791582

PHYSICS **9702/43**

Paper 4 A Level Structured Questions **May/June 2019**

2 hours

Candidates answer on the Question Paper.

No Additional Materials are required.

READ THESE INSTRUCTIONS FIRST

Write your centre number, candidate number and name on all the work you hand in.
Write in dark blue or black pen.
You may use an HB pencil for any diagrams or graphs.
Do not use staples, paper clips, glue or correction fluid.
DO **NOT** WRITE IN ANY BARCODES.

Answer **all** questions.

Electronic calculators may be used.
You may lose marks if you do not show your working or if you do not use appropriate units.

At the end of the examination, fasten all your work securely together.
The number of marks is given in brackets [ ] at the end of each question or part question.

This document consists of **26** printed pages and **2** blank pages.

DC (ST/CB) 180484
© UCLES 2019

Cambridge Assessment International Education

Data

speed of light in free space	$c = 3.00 \times 10^{8}\,\text{m s}^{-1}$
permeability of free space	$\mu_0 = 4\pi \times 10^{-7}\,\text{H m}^{-1}$
permittivity of free space	$\varepsilon_0 = 8.85 \times 10^{-12}\,\text{F m}^{-1}$
	$(\frac{1}{4\pi\varepsilon_0} = 8.99 \times 10^{9}\,\text{m F}^{-1})$
elementary charge	$e = 1.60 \times 10^{-19}\,\text{C}$
the Planck constant	$h = 6.63 \times 10^{-34}\,\text{J s}$
unified atomic mass unit	$1\,\text{u} = 1.66 \times 10^{-27}\,\text{kg}$
rest mass of electron	$m_\text{e} = 9.11 \times 10^{-31}\,\text{kg}$
rest mass of proton	$m_\text{p} = 1.67 \times 10^{-27}\,\text{kg}$
molar gas constant	$R = 8.31\,\text{J K}^{-1}\,\text{mol}^{-1}$
the Avogadro constant	$N_\text{A} = 6.02 \times 10^{23}\,\text{mol}^{-1}$
the Boltzmann constant	$k = 1.38 \times 10^{-23}\,\text{J K}^{-1}$
gravitational constant	$G = 6.67 \times 10^{-11}\,\text{N m}^2\,\text{kg}^{-2}$
acceleration of free fall	$g = 9.81\,\text{m s}^{-2}$

© UCLES 2019

Formulae

uniformly accelerated motion	$s = ut + \frac{1}{2}at^2$ $v^2 = u^2 + 2as$
work done on/by a gas	$W = p\Delta V$
gravitational potential	$\phi = -\frac{Gm}{r}$
hydrostatic pressure	$p = \rho gh$
pressure of an ideal gas	$p = \frac{1}{3}\frac{Nm}{V}\langle c^2 \rangle$
simple harmonic motion	$a = -\omega^2 x$
velocity of particle in s.h.m.	$v = v_0 \cos \omega t$ $v = \pm \omega\sqrt{(x_0^2 - x^2)}$
Doppler effect	$f_o = \frac{f_s v}{v \pm v_s}$
electric potential	$V = \frac{Q}{4\pi\varepsilon_0 r}$
capacitors in series	$1/C = 1/C_1 + 1/C_2 + \ldots$
capacitors in parallel	$C = C_1 + C_2 + \ldots$
energy of charged capacitor	$W = \frac{1}{2}QV$
electric current	$I = Anvq$
resistors in series	$R = R_1 + R_2 + \ldots$
resistors in parallel	$1/R = 1/R_1 + 1/R_2 + \ldots$
Hall voltage	$V_H = \frac{BI}{ntq}$
alternating current/voltage	$x = x_0 \sin \omega t$
radioactive decay	$x = x_0 \exp(-\lambda t)$
decay constant	$\lambda = \frac{0.693}{t_{\frac{1}{2}}}$

© UCLES 2019

[Turn over

Answer **all** the questions in the spaces provided.

1 **(a)** Two point masses are isolated in space and are separated by a distance x.

State an expression relating the gravitational force F between the two masses to the magnitudes M and m of the masses. State the name of any other symbol used.

.....

.....

..... [1]

(b) A spacecraft is to be put into a circular orbit about a spherical planet.

The planet may be considered to be isolated in space. The mass of the planet, assumed to be concentrated at its centre, is 7.5×10^{23} kg. The radius of the planet is 3.4×10^{6} m.

(i) The spacecraft is to orbit the planet at a height of 2.4×10^{5} m above the surface of the planet. At this altitude, there is no atmosphere.

Show that the speed of the spacecraft in its orbit is $3.7 \times 10^{3}\,\text{m s}^{-1}$.

[2]

(ii) One possible path of the spacecraft as it approaches the planet is shown in Fig. 1.1.

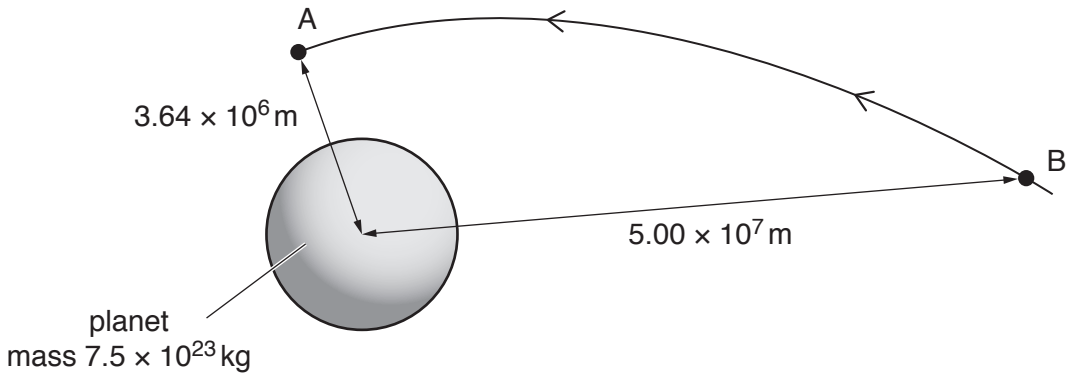

Fig. 1.1 (not to scale)

The spacecraft enters the orbit at point A with speed $3.7 \times 10^3\,m\,s^{-1}$.

At point B, a distance of $5.00 \times 10^7\,m$ from the centre of the planet, the spacecraft has a speed of $4.1 \times 10^3\,m\,s^{-1}$. The mass of the spacecraft is 650 kg.

For the spacecraft moving from point B to point A, show that the change in gravitational potential energy of the spacecraft is $8.3 \times 10^9\,J$.

[3]

(c) By considering changes in gravitational potential energy and in kinetic energy of the spacecraft, determine whether the total energy of the spacecraft increases or decreases in moving from point B to point A. A numerical answer is not required.

.....

.....

.....

..... [2]

[Total: 8]

2 A fixed mass of an ideal gas has volume 210 cm^3 at pressure 3.0×10^5 Pa and temperature 270 K.

The volume of the gas is reduced at constant pressure to 140 cm^3, as shown in Fig. 2.1.

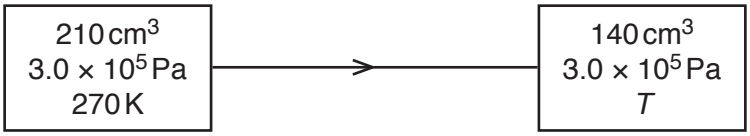

Fig. 2.1

The final temperature of the gas is T.

(a) Determine:

(i) the amount of gas

amount = ... mol [3]

(ii) the final temperature T of the gas

T = ...K [2]

(iii) the external work done on the gas.

work done = ... J [2]

© UCLES 2019

(b) For this change in volume and temperature of the gas, the thermal energy transferred is 53 J.

Determine ΔU, the change in internal energy of the gas.

ΔU = ... J [3]

[Total: 10]

3 A hollow tube, sealed at one end, has a cross-sectional area A of 24 cm^2.
The tube contains sand so that the total mass M of the tube and sand is 0.23 kg.

The tube floats upright in a liquid of density ρ, as illustrated in Fig. 3.1.

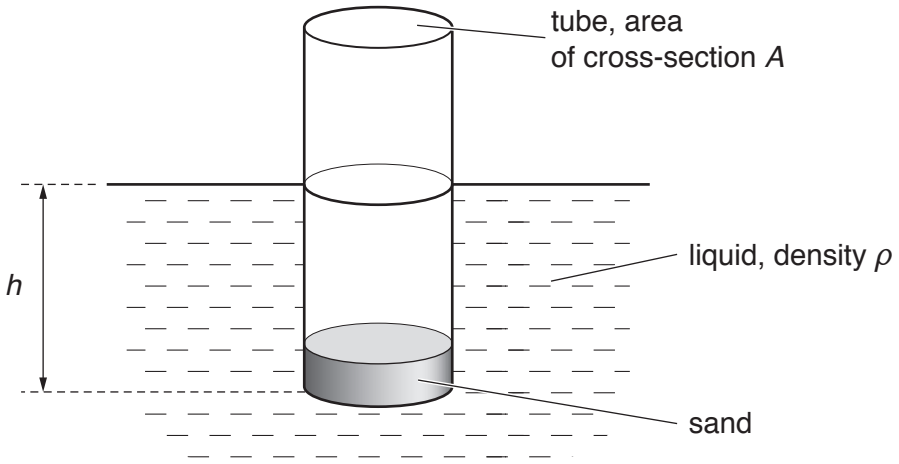

Fig. 3.1

The depth of the bottom of the tube below the liquid surface is h.

The tube is displaced vertically and then released. The variation with time t of the depth h is shown in Fig. 3.2.

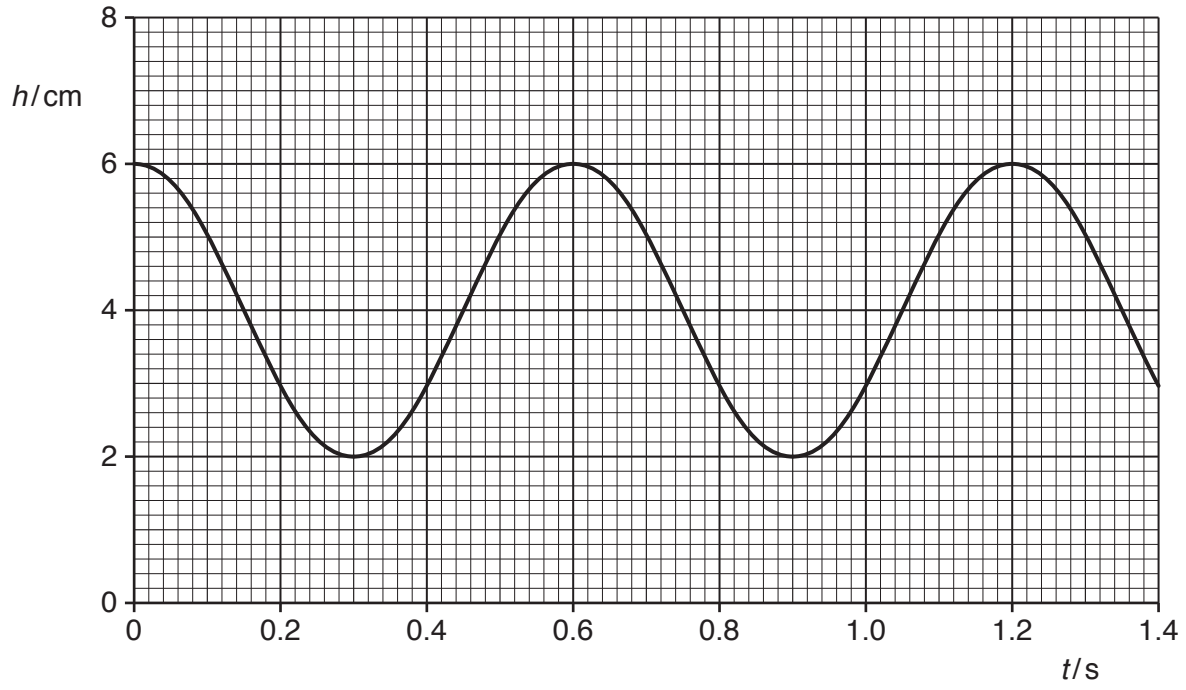

Fig. 3.2

(a) Determine:

(i) the amplitude, in metres, of the oscillations

amplitude = ... m [1]

© UCLES 2019

(ii) the frequency of oscillation of the tube in the liquid

frequency = ...Hz [2]

(iii) the acceleration of the tube when h is a maximum.

acceleration = ...$m\,s^{-2}$ [2]

(b) The frequency f of oscillation of the tube is given by the expression

$$f = \frac{1}{2\pi}\sqrt{\left(\frac{A\rho g}{M}\right)}$$

where g is the acceleration of free fall.

Calculate the density ρ of the liquid in which the tube is floating.

ρ = ...$kg\,m^{-3}$ [2]

(c) The oscillations illustrated in Fig. 3.2 are undamped. In practice, the liquid does cause light damping.

On Fig. 3.2, draw a line to show light damping of the oscillations for time $t = 0$ to time $t = 1.4\,s$. [3]

[Total: 10]

© UCLES 2019

[Turn over

4 **(a)** During the transmission of a signal, attenuation occurs and noise is picked up.

State what is meant by:

(i) *attenuation*

.....

..... [1]

(ii) *noise*.

.....

.....

..... [2]

(b) By reference to **(a)(ii)**, explain the advantage of the transmission of the signal in digital form rather than in analogue form.

.....

..... [1]

(c) Part of an analogue signal is shown in Fig. 4.1.

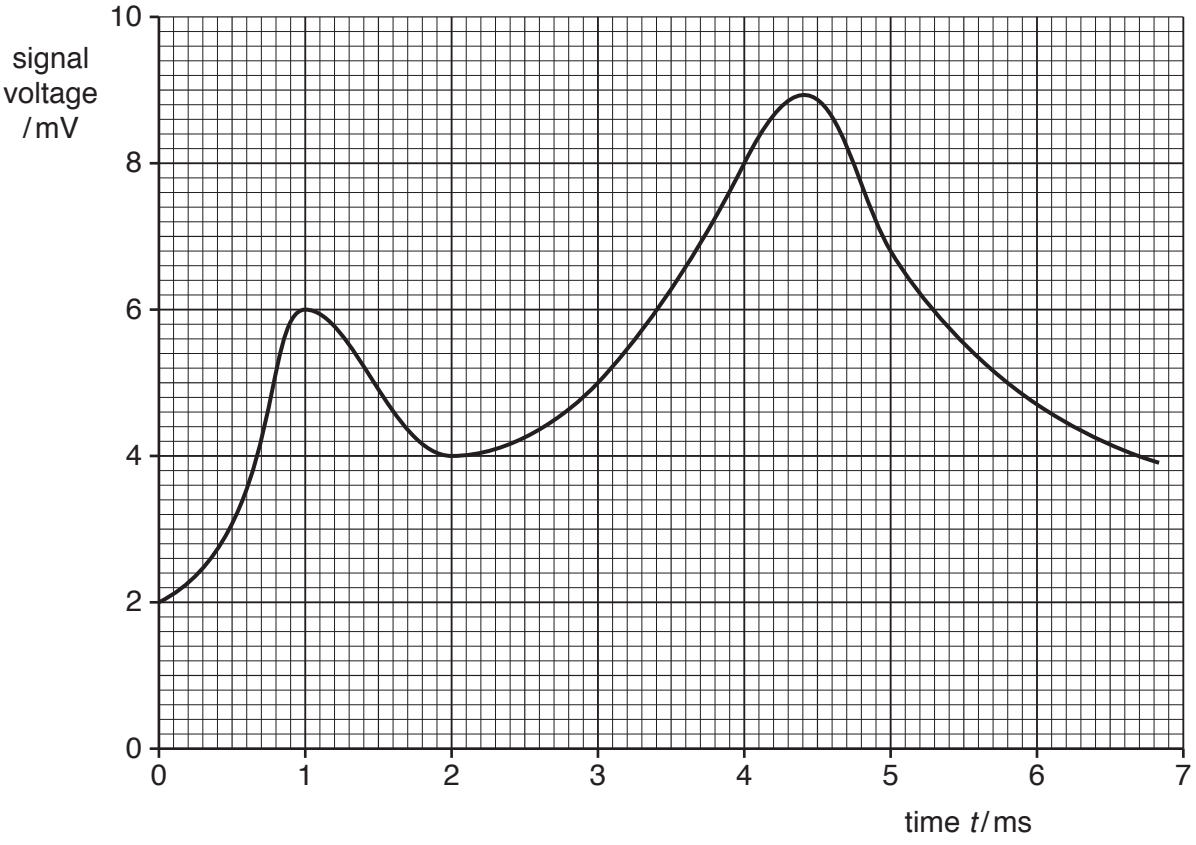

Fig. 4.1

© UCLES 2019

The signal is to be transmitted in digital form.

The analogue signal is sampled at a frequency of 1.0×10^3 Hz using an analogue-to-digital converter (ADC). The ADC produces 4-bit numbers.

The times *t* at which the analogue signal is sampled are shown in Fig. 4.2.

time *t*/ms	0	1.0	2.0	3.0	4.0	5.0	6.0
digital number	0010	0110	0100	0101	.....	.....	.....

Fig. 4.2

On Fig. 4.2:

(i) for the digital number at time $t = 3.0$ ms, underline the least significant bit (LSB) [1]

(ii) state the digital numbers corresponding to the sampling times between time $t = 4.0$ ms and time $t = 6.0$ ms. [2]

(d) The transmitted digital signal is converted back to an analogue signal using a digital-to-analogue converter (DAC).

On Fig. 4.3, show the variation with time *t* of the output levels of the DAC for time $t = 0$ to time $t = 4.0$ ms. Assume that there is negligible time delay in the transmission line.

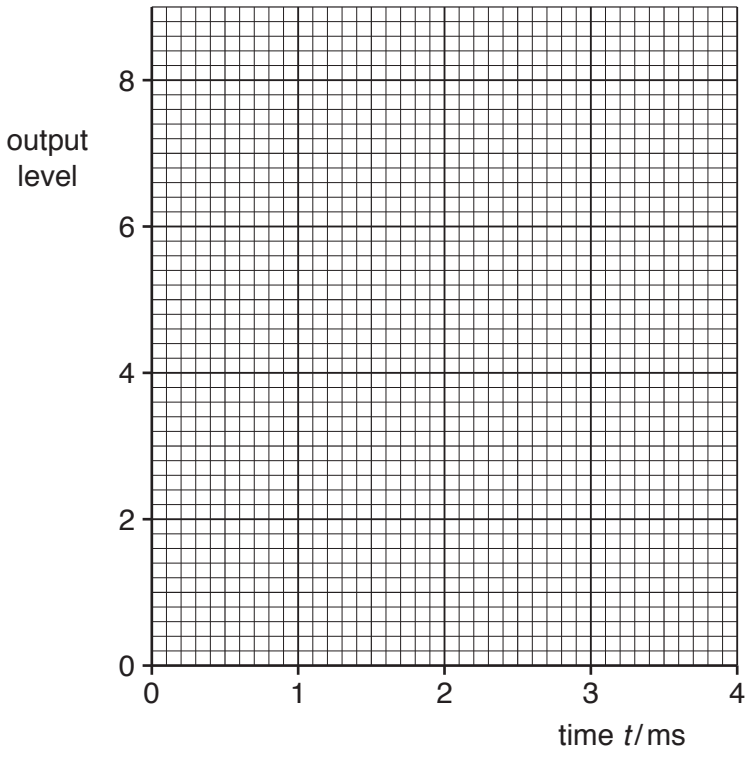

Fig. 4.3

[3]

[Total: 10]

5 **(a)** State what is meant by *electric field strength*.

.....

.....

..... [2]

(b) Two point charges A and B are situated a distance 15 cm apart in a vacuum, as illustrated in Fig. 5.1.

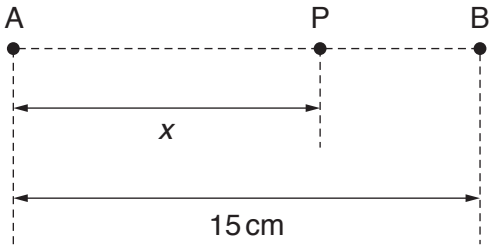

Fig. 5.1

Point P lies on the line joining the charges and is a distance x from charge A.

The variation with distance x of the electric field strength E at point P is shown in Fig. 5.2.

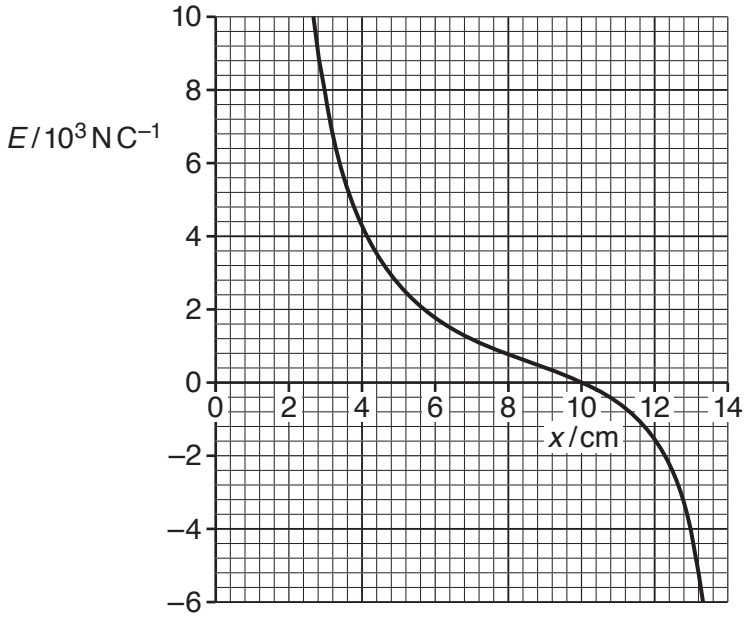

Fig. 5.2

(i) By reference to the direction of the electric field, state and explain whether the charges A and B have the same, or opposite, signs.

.....

.....

..... [2]

(ii) State why, although charge A is a point charge, the electric field strength between $x = 3\,\text{cm}$ and $x = 7\,\text{cm}$ does not obey an inverse-square law.

.....

..... [1]

(iii) Use Fig. 5.2 to determine the ratio

$$\frac{\text{magnitude of charge A}}{\text{magnitude of charge B}}.$$

ratio = ... [3]

[Total: 8]

6 **(a)** State **two** different functions of capacitors in electrical circuits.

1. .....

.....

2. .....

.....

[2]

(b) Three uncharged capacitors of capacitances C_1, C_2 and C_3 are connected in series with a battery of electromotive force (e.m.f.) E and a switch, as shown in Fig. 6.1.

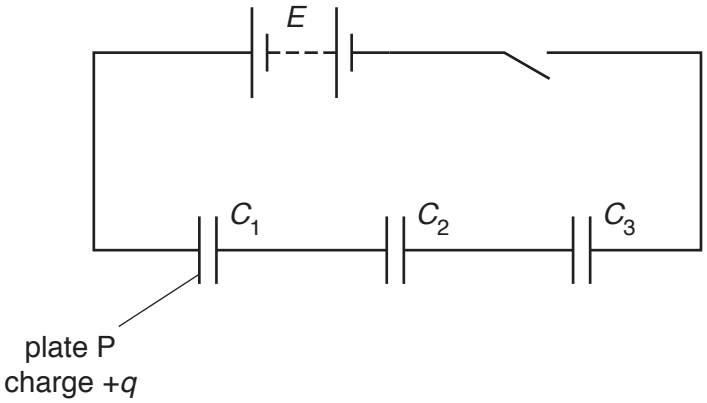

Fig. 6.1

When the switch is closed, there is a charge $+q$ on plate P of the capacitor of capacitance C_1.

Show that the combined capacitance C of the three capacitors is given by the expression

$$\frac{1}{C} = \frac{1}{C_1} + \frac{1}{C_2} + \frac{1}{C_3}.$$

[3]

© UCLES 2019

(c) A student has available four capacitors, each of capacitance 20 μF.

Draw circuit diagrams, one in each case, to show how the student may connect some or all of the capacitors to produce a combined capacitance of:

(i) 60 μF

[1]

(ii) 15 μF.

[1]

[Total: 7]

7 The circuit for an inverting amplifier incorporating an ideal operational amplifier (op-amp) is shown in Fig. 7.1.

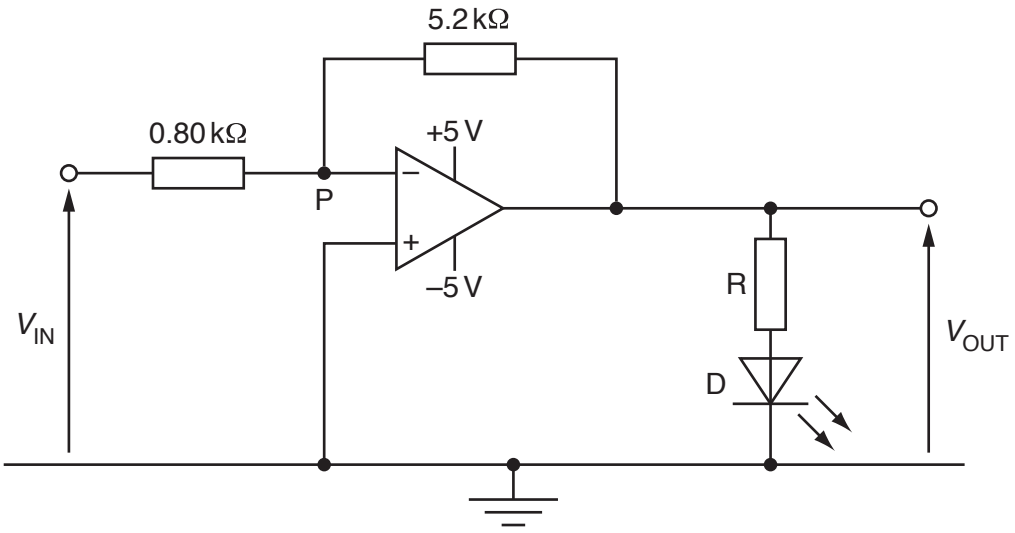

Fig. 7.1

(a) For the circuit of Fig. 7.1:

(i) explain why point P is known as a *virtual earth*

.....

.....

.....

..... [3]

(ii) calculate the gain of the amplifier.

gain = ... [2]

(b) When the op-amp is saturated, the potential difference across the LED is 2.3 V.

Calculate the minimum resistance of resistor R so that the current in the LED is limited to 30 mA.

resistance = ... Ω [3]

[Total: 8]

8 A solenoid is connected in series with a battery and a switch, as illustrated in Fig. 8.1.

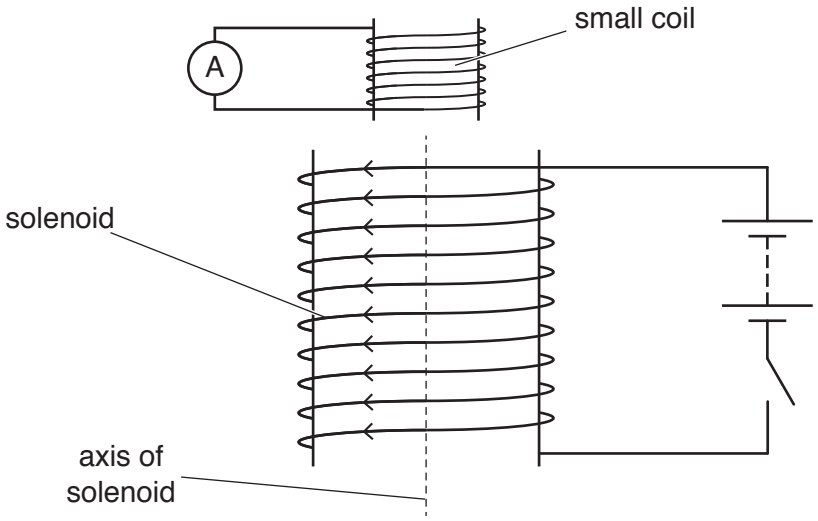

Fig. 8.1

A small coil, connected to a sensitive ammeter, is situated near one end of the solenoid.

As the current in the solenoid is switched on, there is a changing magnetic field inside the solenoid.

(a) (i) State what is meant by a *magnetic field*.

.....

..... [1]

(ii) On Fig. 8.1, draw an arrow on the axis of the solenoid to show the direction of the magnetic field inside the solenoid. Label this arrow P. [1]

(b) As the current in the solenoid is switched on, there is a current induced in the small coil. This induced current gives rise to a magnetic field in the small coil.

(i) State Lenz's law.

.....

.....

..... [2]

© UCLES 2019

(ii) Use Lenz's law to state and explain the direction of the magnetic field due to the induced current in the small coil. On Fig. 8.1, mark this direction with an arrow inside the small coil.

.....

.....

.....

..... [3]

(c) The small coil has an area of cross-section $7.0 \times 10^{-4}\,m^2$ and contains 75 turns of wire.

A constant current in the solenoid produces a uniform magnetic flux of flux density 1.4 mT throughout the small coil.

The direction of the current in the solenoid is reversed in a time of 0.12 s.

Calculate the average e.m.f. induced in the small coil.

e.m.f. = ...V [3]

[Total: 10]

© UCLES 2019

[Turn over

BLANK PAGE

© UCLES 2019

9 Nuclear magnetic resonance imaging (NMRI) is used to obtain diagnostic information about internal body structures.

State, during the use of NMRI, the function of:

(a) the large constant magnetic field

.....

.....

.....

.....

..... [3]

(b) the non-uniform magnetic field.

.....

.....

.....

.....

..... [2]

[Total: 5]

10 A bridge rectifier contains four diodes. The output of the rectifier is connected to a resistor R, as shown in Fig. 10.1.

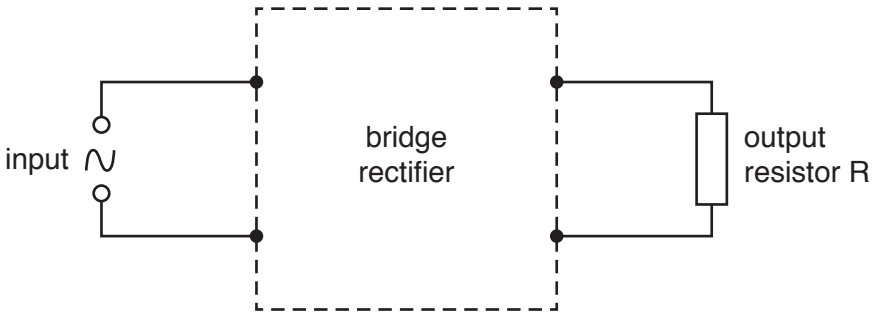

Fig. 10.1

The variation with time t of the input e.m.f. E to the rectifier is given by the expression

$$E = 15\cos(210t)$$

where t is measured in seconds and E in volts.

The variation with time t of the potential difference V across resistor R is shown in Fig. 10.2.

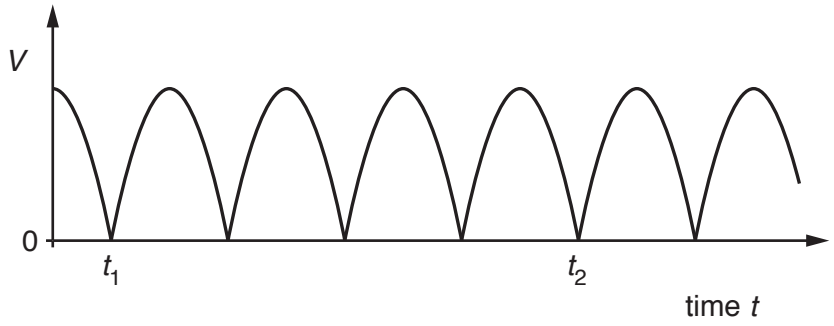

Fig. 10.2

Determine:

(a) the maximum potential difference V_{MAX} across resistor R

V_{MAX} = ...V [1]

© UCLES 2019

(b) the time interval, to two significant figures, between time t_1 and time t_2.

time = ... s [3]

[Total: 4]

11 (a) State **three** pieces of evidence provided by the photoelectric effect for a particulate nature of electromagnetic radiation.

1. .....

.....

2. .....

.....

3. .....

.....

[3]

(b) The work function energies of some metals are shown in Fig. 11.1.

	work function energy / eV
sodium	2.4
calcium	2.9
zinc	3.6
silver	4.3

Fig. 11.1

Each metal is irradiated with electromagnetic radiation of wavelength 380 nm.

(i) Calculate the energy, in eV, of a photon of electromagnetic radiation of wavelength 380 nm.

energy = ...eV [3]

(ii) Determine which metals will give rise to the emission of photoelectrons. Explain your answer.

.....

..... [2]

© UCLES 2019

(c) Photons of wavelength 380 nm are incident normally on a metal surface at a rate of $7.6 \times 10^{14}\,s^{-1}$.
All the photons are absorbed in the surface and no photoelectrons are emitted.

Calculate the force exerted on the metal surface by the incident photons.

force = ... N [3]

[Total: 11]

12 **(a)** A sample of a radioactive isotope contains N nuclei of the isotope at time T.
At time $(T + \Delta T)$, the sample contains $(N - \Delta N)$ nuclei of the isotope. The time interval ΔT is short.

Use the symbols N, ΔN, T and ΔT to give expressions for:

(i) the average activity of the sample during the time ΔT

..... [1]

(ii) the probability of decay of a nucleus in the time ΔT

..... [1]

(iii) the decay constant λ of the isotope.

..... [1]

(b) The isotope polonium-208 ($^{208}_{84}$Po) is radioactive and decays to form lead-204 ($^{204}_{82}$Pb).
The nuclear equation for this decay is

$$^{208}_{84}\text{Po} \longrightarrow {}^{204}_{82}\text{Pb} + {}^{4}_{2}\text{He}.$$

Data for nuclear masses are given in Fig. 12.1.

	mass / u
$^{4}_{2}$He	4.002 603
$^{204}_{82}$Pb	203.973 043
$^{208}_{84}$Po	207.981 245

Fig. 12.1

(i) Determine, for the decay of one nucleus of polonium-208:

1. the change, in u, of the mass

mass change = ... u [1]

© UCLES 2019

2. the total energy, in pJ, released.

energy = ... pJ [3]

(ii) The polonium-208 nucleus is initially stationary. The initial kinetic energy of the $^{4}_{2}$He nucleus (α-particle) is found to be less than the energy calculated in **(i) part 2**.

Suggest **two** possible reasons for this difference.

1. .....

.....

2. .....

.....

[2]

[Total: 9]

BLANK PAGE

Permission to reproduce items where third-party owned material protected by copyright is included has been sought and cleared where possible. Every reasonable effort has been made by the publisher (UCLES) to trace copyright holders, but if any items requiring clearance have unwittingly been included, the publisher will be pleased to make amends at the earliest possible opportunity.

To avoid the issue of disclosure of answer-related information to candidates, all copyright acknowledgements are reproduced online in the Cambridge Assessment International Education Copyright Acknowledgements Booklet. This is produced for each series of examinations and is freely available to download at www.cambridgeinternational.org after the live examination series.

Cambridge Assessment International Education is part of the Cambridge Assessment Group. Cambridge Assessment is the brand name of the University of Cambridge Local Examinations Syndicate (UCLES), which itself is a department of the University of Cambridge.

© UCLES 2019